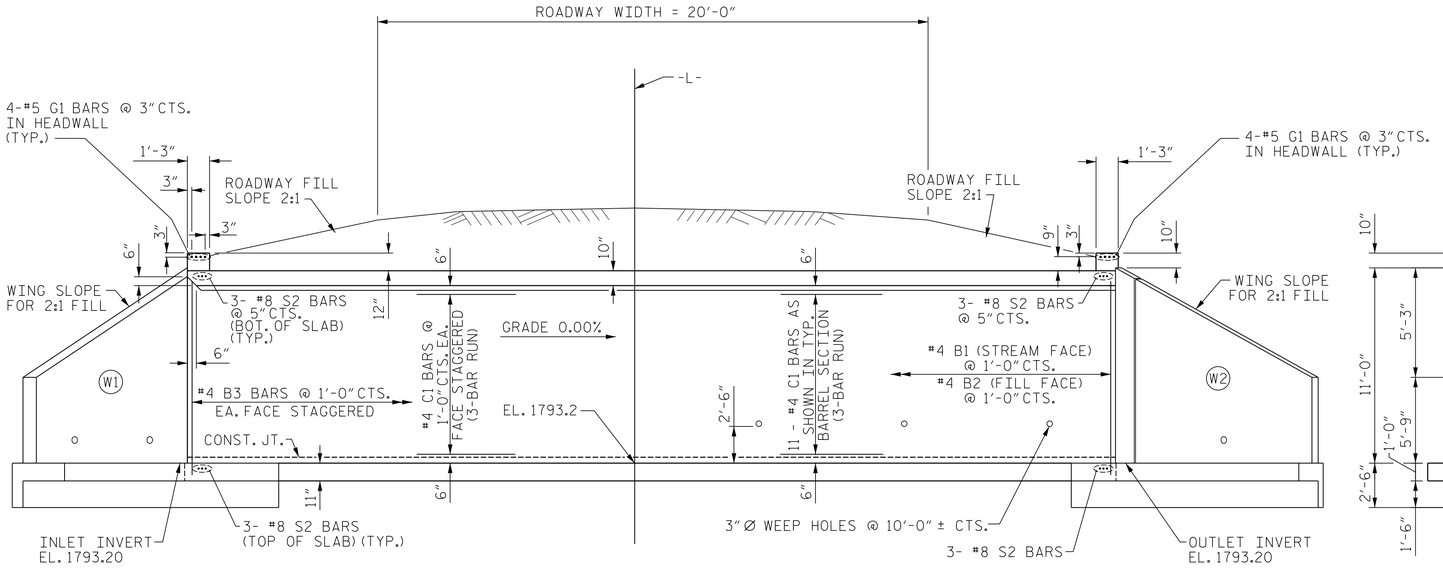

INTERIOR WALL

EXTERIOR WALL

CULVERT SECTION NORMAL TO ROADWAY

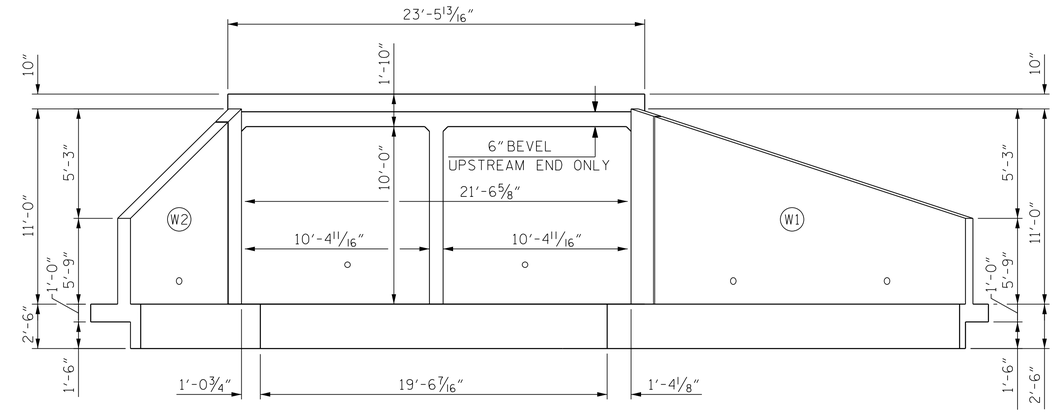

END ELEVATION NORMAL TO SKEW

(INLET END)

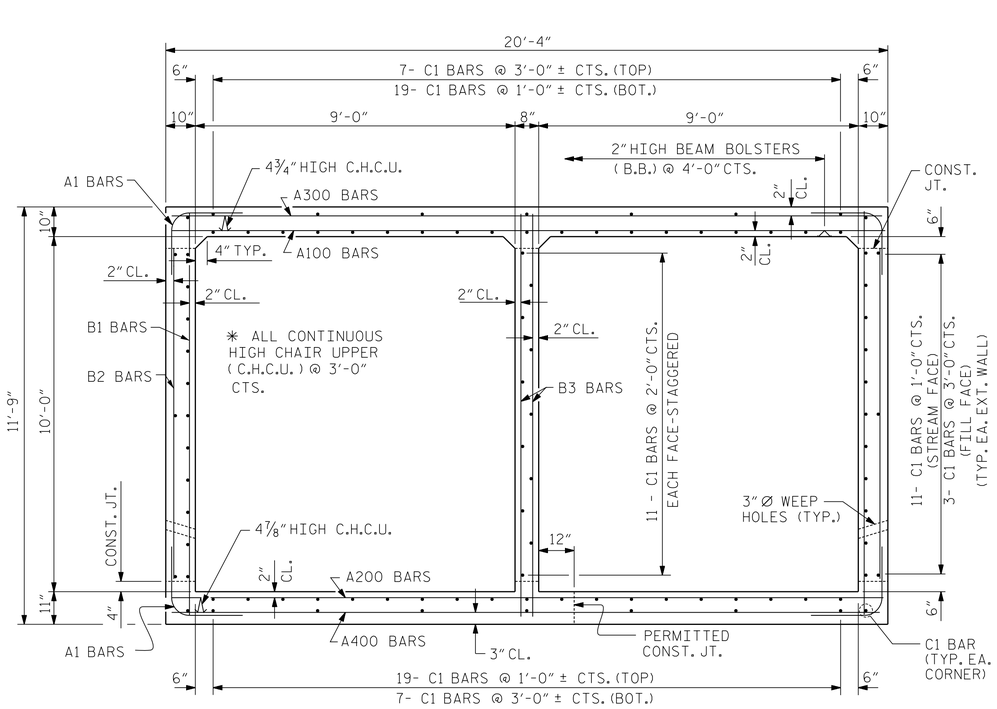

RIGHT ANGLE SECTION OF BARREL

THERE ARE 95 "C" BARS IN SECTION OF BARREL.

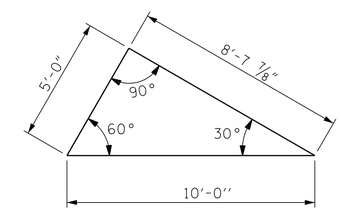

SKEW TRIANGLE

PROJECT NO. 14SP.20221.1/.2

CLAY COUNTY

STATION: 21+97.70 -L-

SHEET 2 OF 9

NORTH CAROLINA PROFESSIONAL SEAL 20777 ENGINEER HARDY L. WILLIS

DocuSigned by: Hardy Willis CC287FCF0223461... 11/4/2016

DOCUMENT NOT CONSIDERED FINAL UNLESS ALL SIGNATURES COMPLETED

Vaughn & Melton Consulting Engineers
Asheville, North Carolina 828-253-2796
Charlotte, NC 704-357-0488 | Boone, NC 828-355-9933
Tri-Cities, TN 423-467-8401
Knoxville, TN 865-546-5800
Spartanburg, SC 864-574-4775
Charleston, SC 843-974-5650
Middlesboro, KY 606-248-6600
Atlanta, GA 770-627-3509
Copyright © 2006 Vaughn & Melton, Inc. All Rights Reserved

DWN. BY: MAF DATE: 7/14
CHKD. BY: HLW DATE: 7/14

STATE OF NORTH CAROLINA
DEPARTMENT OF TRANSPORTATION
RALEIGH

DOUBLE BARREL 9' X 10' RCBC 55° SKEW HYATT MILL CREEK

REVISIONS						SHEET NO.
NO.	BY:	DATE:	NO.	BY:	DATE:	C-12
1			3			TOTAL SHEETS
2			4			19