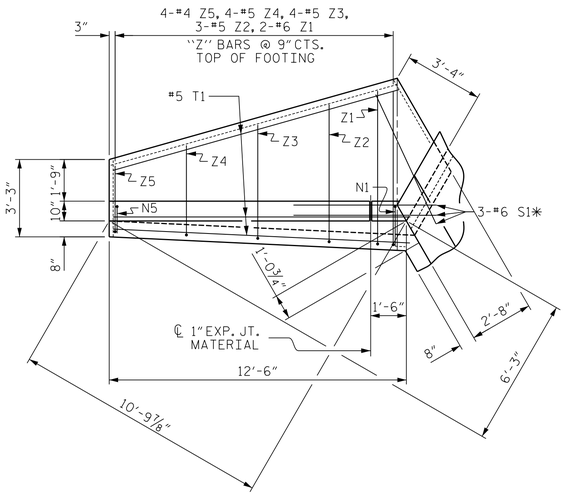

PLAN W2

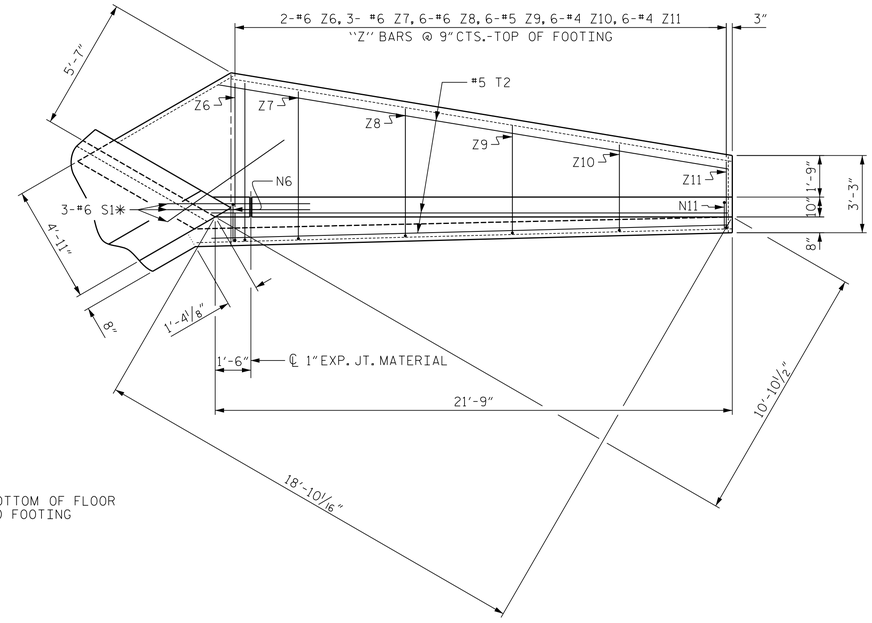

* S1 BARS @ BOTTOM OF FLOOR SLAB AND FOOTING

PLAN W1

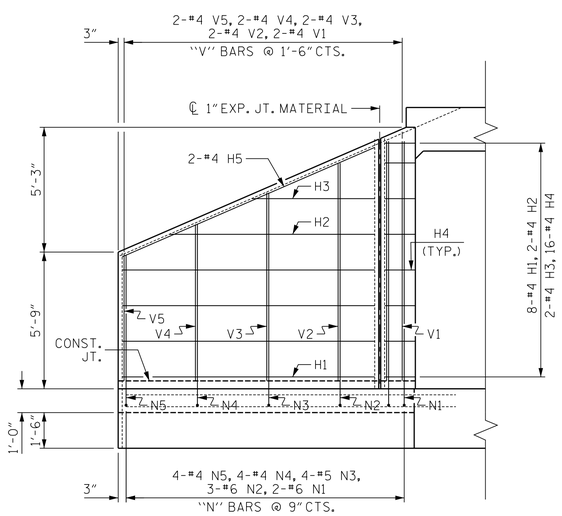

ELEVATION W2

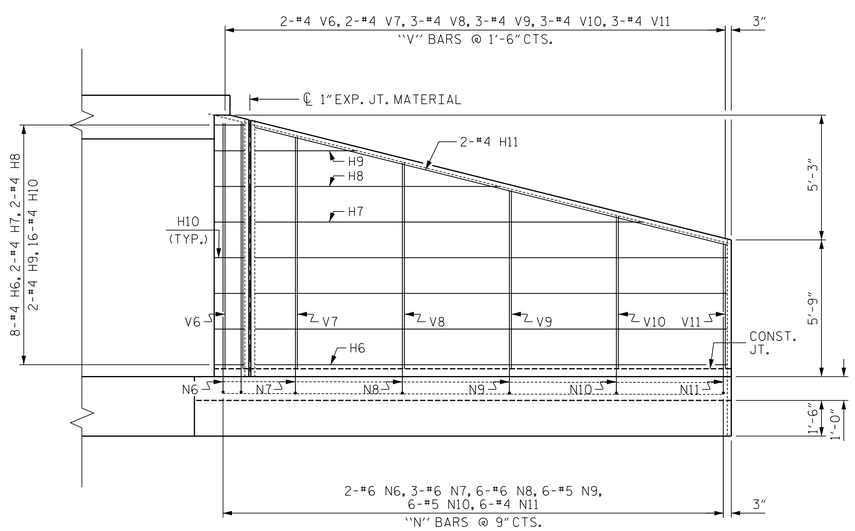

ELEVATION W1

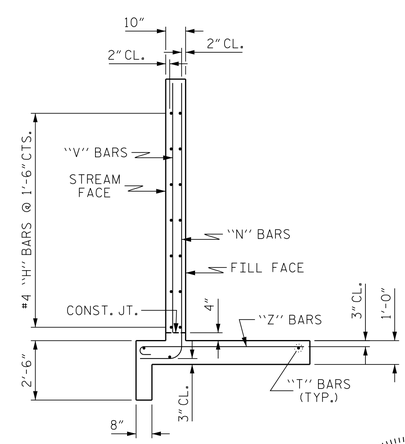

TYPICAL WING SECTION

DOCUMENT NOT CONSIDERED FINAL UNLESS ALL SIGNATURES COMPLETED

BAR TYPES

ALL BAR DIMENSIONS ARE OUT TO OUT.

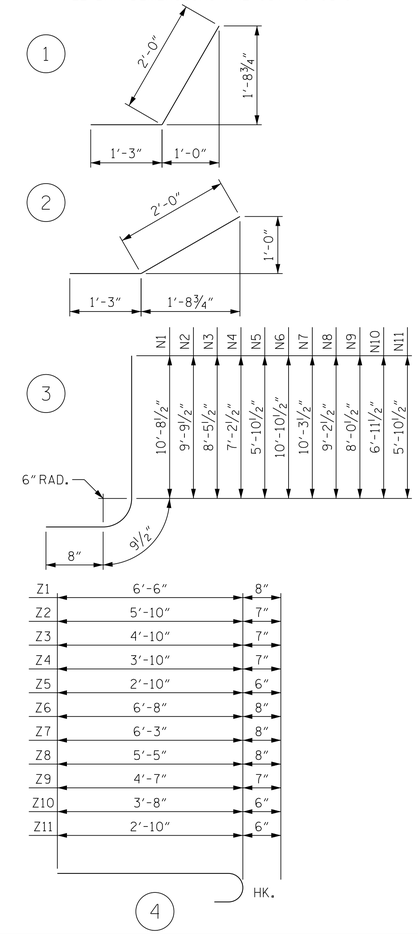

BILL OF MATERIAL

BAR	NO.	SIZE	TYPE	LENGTH	WEIGHT
H1	16	#4	STR	10'-7"	113
H2	4	#4	STR	8'-7"	23
H3	4	#4	STR	5'-2"	14
H4	32	#4	1	3'-3"	69
H5	4	#4	STR	11'-7"	31
H6	16	#4	STR	19'-10"	212
H7	4	#4	STR	16'-4"	44
H8	4	#4	STR	10'-3"	27
H9	4	#4	STR	4'-3"	11
H10	32	#4	2	3'-3"	69
H11	4	#4	STR	20'-5"	55
N1	4	#6	3	12'-2"	73
N2	6	#6	3	11'-3"	101
N3	8	#5	3	9'-11"	83
N4	8	#4	3	8'-8"	46
N5	8	#4	3	7'-4"	39
N6	4	#6	3	12'-4"	74
N7	6	#6	3	11'-9"	106
N8	12	#6	3	10'-8"	192
N9	12	#5	3	9'-6"	119
N10	12	#5	3	8'-5"	105
N11	12	#4	3	7'-4"	59
S1	12	#6	STR	6'-0"	108
T1	6	#5	STR	12'-6"	78
T2	6	#5	STR	21'-9"	136
V1	4	#4	STR	10'-1"	27
V2	4	#4	STR	9'-2"	24
V3	4	#4	STR	7'-11"	21
V4	4	#4	STR	6'-7"	18
V5	4	#4	STR	5'-4"	14
V6	4	#4	STR	10'-4"	28
V7	4	#4	STR	9'-9"	26
V8	6	#4	STR	8'-8"	35
V9	6	#4	STR	7'-6"	30
V10	6	#4	STR	6'-5"	26
V11	6	#4	STR	5'-3"	21
Z1	4	#6	4	7'-2"	43
Z2	6	#5	4	6'-5"	40
Z3	8	#5	4	5'-5"	45
Z4	8	#5	4	4'-5"	37
Z5	8	#4	4	3'-4"	18
Z6	4	#6	4	7'-4"	44
Z7	6	#6	4	6'-11"	62
Z8	12	#6	4	6'-1"	110
Z9	12	#5	4	5'-2"	65
Z10	12	#4	4	4'-2"	33
Z11	12	#4	4	3'-4"	27

REINFORCING STEEL FOR 4 WINGS	2781 LBS
CLASS A CONCRETE	
4 WINGS	36.0 CY
2 HEADWALLS	2.2 CY
2 END CURTAIN WALLS	2.4 CY
TOTAL	40.6 CY

PROJECT NO. 14SP.20221.1/.2

CLAY COUNTY

STATION: 21+97.70 -L-

SHEET 7 OF 9

STATE OF NORTH CAROLINA
DEPARTMENT OF TRANSPORTATION
RALEIGH

STANDARD WINGS FOR CONCRETE BOX CULVERT

H = 10'-0" SLOPE = 2:1

60° OR 120° SKEW

NORTH CAROLINA PROFESSIONAL SEAL 20777 ENGINEER HARRY L. WILLIS

DocuSign Envelope ID: CC287FCF0223461F
Harry Willis 11/14/2016

ASSEMBLED BY : MAF	DATE : 6/14
CHECKED BY : HLW	DATE : 6/14
DRAWN BY : CCJ 12/99	
CHECKED BY : RWW 03/00	

REVISIONS

NO.	BY:	DATE:	NO.	BY:	DATE:
1			3		
2			4		

SHEET NO. C-17

TOTAL SHEETS 19

STD. NO. CW6010