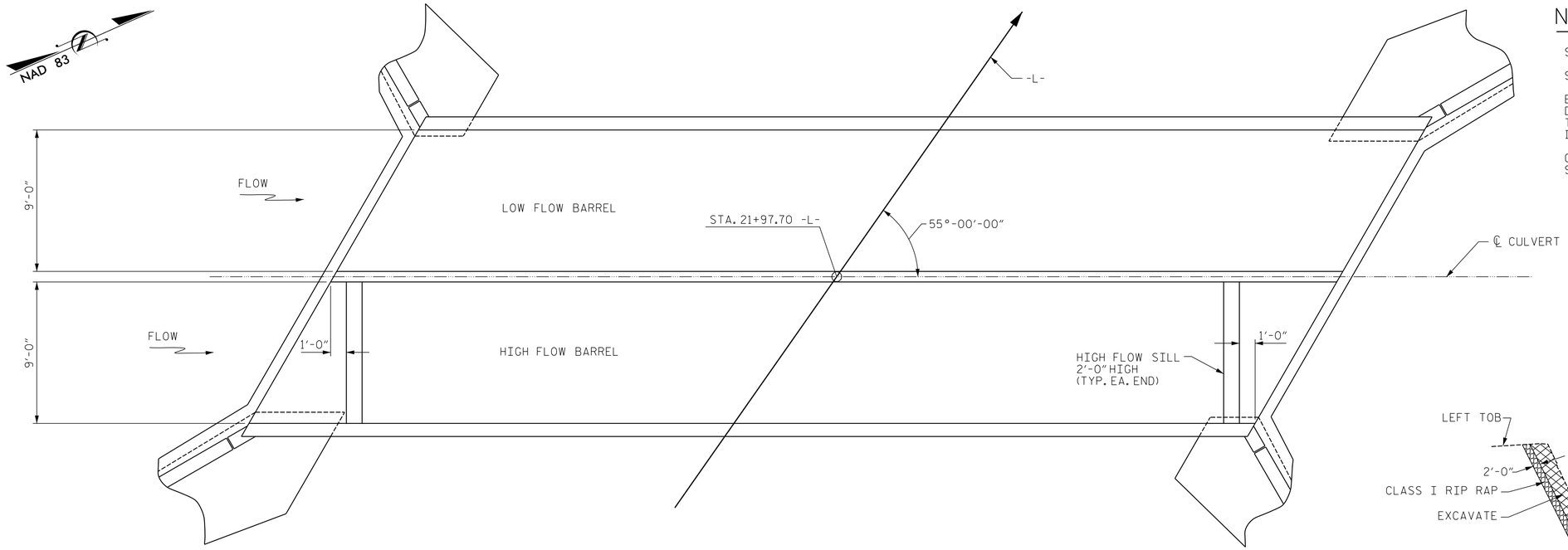

CULVERT SILL LAYOUT

NOTES

SEE SHEET C-11 FOR SILL CONCRETE QUANTITY

SEE SHEET C-16 BAR SCHEDULE FOR DOWELS

BED MATERIAL SHALL BE EXCAVATED AND STOCKPILED DURING INSTALLATION OF THE CULVERT AND SILLS. THE NATURAL BED MATERIALS SHALL THEN BE PLACED IN THE CULVERT TO A DEPTH OF ONE FOOT.

CHANNEL SUBSTRATE MATERIAL MAY BE USED TO SUPPLEMENT BED MATERIAL.

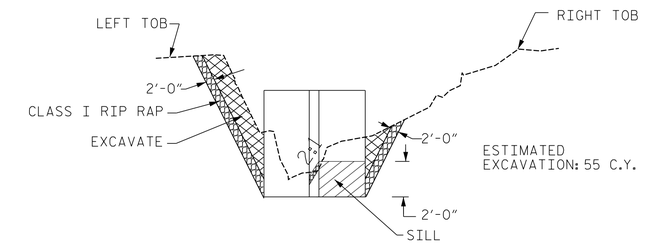

INLET BENCH

(FACING DOWNSTREAM)

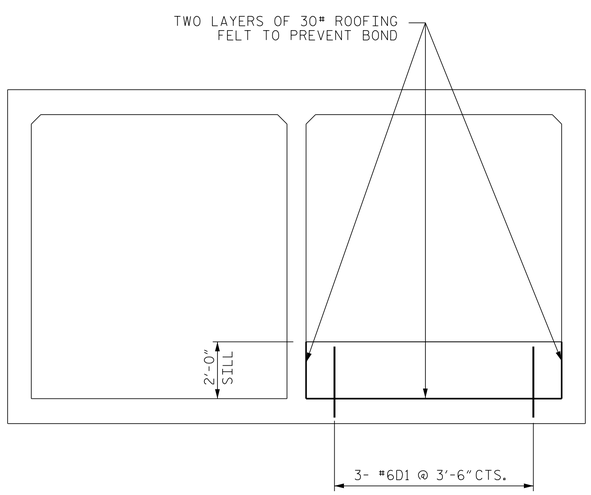

END ELEVATION

LOOKING DOWNSTREAM

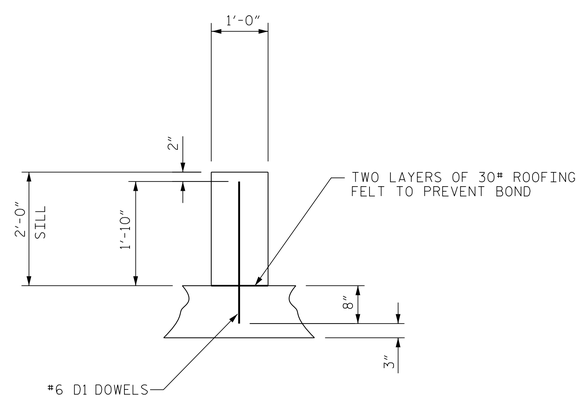

SECTION THROUGH SILL

DOWELS MAY BE PUSHED INTO GREEN CONCRETE AFTER SLAB HAS BEEN FLOATED.

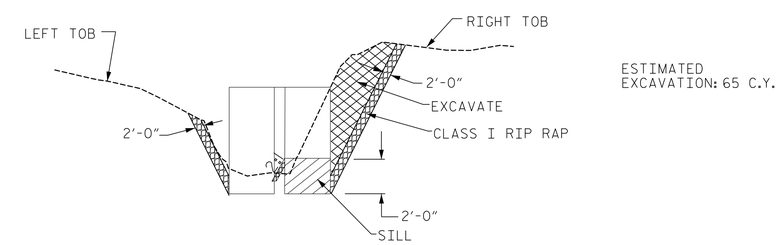

OUTLET BENCH

(FACING DOWNSTREAM)

PROJECT NO. 14SP.20221.1/.2

CLAY COUNTY

STATION: 21+97.70 -L-

SHEET 5 OF 9

NORTH CAROLINA PROFESSIONAL SEAL 20777 ENGINEER HARDY L. WILLIS

DocuSigned by: Hardy Willis CC2877CF0223461... 11/4/2016

DOCUMENT NOT CONSIDERED FINAL UNLESS ALL SIGNATURES COMPLETED

V&M Vaughn & Melton Consulting Engineers
Asheville, North Carolina 828-253-2796
Charlotte, NC 704-357-0488 | Boone, NC 828-355-9933
Tri-Cities, TN 423-467-8401
Knoxville, TN 865-546-5800
Spartanburg, SC 864-574-4175
Charleston, SC 843-974-5650
Middlesboro, KY 606-248-6600
Atlanta, GA 770-627-3509
Copyright © 2006 Vaughn & Melton, Inc. All Rights Reserved

DWN. BY: MAF DATE: 7/14
CHKD. BY: HLW DATE: 7/14

STATE OF NORTH CAROLINA
DEPARTMENT OF TRANSPORTATION
RALEIGH

DOUBLE BARREL
9' X 10' RCBC
55° SKEW
HYATT MILL CREEK

REVISIONS						SHEET NO.
NO.	BY:	DATE:	NO.	BY:	DATE:	C-15
1			3			TOTAL SHEETS
2			4			19